Three Bag Grass Catcher

CONVERSION KIT

FasTrak & FasTrak Super Duty

(HX1000C-48, HX1000C-52 & HX1000C-54)

1380 Legion Road, Detroit Lakes, MN 56501

Phone: 800-725-7761

Fax: 888-385-2345

Email: sales@smtis.com

Website: ztrattachments.com

08/25/2010

TABLE OF CONTENTS

To The New Owner 2
Advice and Cautions 2
Warranty Registration 4
Warranty 5
Safety Precautions 6
Operation 8
Parts and service 9
Grass Pump Parts List 10
Cut Out .....

The operator's manual is an important part of your new grass catcher attachment. It will help you assemble and maintain your unit for best performance. Please read and understand all steps for installation and heed all warnings for use of attachment.

To The New Owner

The purpose of this manual is to assist owners and operators in installing and operating the grass catcher. Please read carefully; information and instructions furnished can help you achieve years of dependable performance.

The decals on the grass catcher are there to remind the operator about possible dangers the belt and chute can be if not used properly. These decals are not intended to be used in place of this manual but instead as an extension of this manual. These decals should not be removed or obliterated. Replace these decals if they become unreadable.

It is the OWNER'S RESPONSIBILITY to make certain all operators read and understand this manual and all decals before operating the grass catcher. It is also the OWNER'S RESPONSIBILITY to make certain that all operators are qualified and physically able individuals that are properly trained in the use of this equipment.

Advice and cautions on the use of Concord Grass Catchers

All Concord Grass Catchers are tested under many conditions. They are not guaranteed to perform optimally under any and all conditions.

Depending on the time of year, grass conditions, moisture, depth of cut, speed of mowing or cleaning and the horsepower available, the performance of your grass catcher will vary. Concord Grass Catchers perform well in most situations, but not all! During conditions of lush grass, wet grass, leaves or other factors, you may have to adjust your mowing to fit the conditions. The use of special high lift blades is also recommended in most conditions. During leaf clean up some systems work better with mulching blades. Check your system to assure proper grass catcher system installation.

Clogging, of catchers although infrequent, can happen in any condition. If this occurs, the collection tube is secured with a rubber strap which allows for cleaning a clog quickly and without tools. Clogging may occur at the grass pump inlet or in the tube, check both. Removal of the tube is easier if the hood is in the raised position.

Caution! Always disengage the deck and shut off the engine and remove key before doing any activity with the grass catcher.

Machines are equipped with many different brands of and horsepower rated engines with various hydraulic systems. There is for many mowers a point where the weight of the mower, operator, catcher system and the clippings or leaves can start to effect the operation of the machine and the life of the drive components. This is particularly true if you are mowing on non-level terrain. If this should occur you will have to compensate by decreasing depth of cut, not filling the bags or hopper to full capacity, or slowing the speed of mowing.

Concord grass catchers are designed and manufactured so that they will work on the mowers described. SMT Integrated Services is not associated with the manufacturer of the mower nor is the mower manufacturer involved in the adaptation of Concord grass catchers for use on their machines.

Warranty Registration

As the new equipment owner, you are responsible to see that the Warranty Registration is fully completed and forwarded to SMT Integrated Services, LLC at the time of sale/delivery. This will assure FULL VALIDATION of your Warranty Coverage.

IMPORTANT: Any unauthorized modification, alteration, or use of non-approved attachments voids the warranty and releases SMT Integrated Services from any liability arising from subsequent use of this equipment.

Model and Serial Number
Catcher serial number is found on the serial identification tag on the rear of the blower housing unit. These numbers are required for warranty registration form.

Please register warranty immediately upon purchase.

Warranty Registration

As the new equipment owner, you are responsible to see that the Warranty Registration is fully completed and forwarded to SMT Integrated Services, LLC at the time of sale/delivery. A copy of the Dealer Invoice is Required to be submitted along with the Registration . This will assure FULL TERM TERM VALIDATION of your Warranty Coverage.

Concord Grass Catcher

Owner information:
Name_____
Address_____
City_____
State_____ Zip_____
Phone_____
Email_____

Dealer information:
Dealer Name_____
Address_____
City_____
State_____ Zip_____

Concord Grass Catcher Information
Date sold_____
Serial # _____ (7 Digit number, starting with 20, is located on the tag found on rear of pump unit)

Mounted on Hustler Mower
Name_____
Model #_____
Serial # _____

Mail to:
SMT Integrated Services, LLC
1380 Legion Road
Detroit Lakes, MN 56501
Email: sales@smtis.com
Fax to: 800-725-7761 (toll free)

For any Questions Contact SMT Integrated Services, LLC at 1-800-725-7761

GRASS CATCHER ATTACHMENT
CONCORD GRASS CATCHER
ONE YEAR FULL WARRANTY FOR RESIDENTIAL USE
(90 DAY LIMITED WARRANTY FOR COMMERCIAL USE)

WHAT IS COVERED BY THIS WARRANTY

SMT Integrated Services makes the following warranty to the original purchaser only:

a. **Residential use**: Concord Grass Catcher used for normal residential purposes* are warranted for one (1) year **from date of purchase** on materials and workmanship.

If the purchaser discovers within this warranty period (one year from the date of purchase) a defect in workmanship or materials:

- He must promptly notify SMT Integrated Services or an authorized dealer, in writing of the defect. In no event shall notification be received by SMT Integrated Services, or an authorized dealer later than thirteen 13 months from date of purchase.
- Within reasonable time after such notification, SMT Integrated Services, will correct any defect in material or workmanship on the Concord Equipment, by repairing or replacing part(s) with either new or used replacement parts.
- Such repair, including parts and labor shall be at the expense of SMT Integrated Services.

*__Normal residential purpose means use of products on same lot as your home.__ Use at more than one location is considered commercial use, and then the commercial use warranty would apply.

b. **Commercial Use**: Concord Grass Catcher used for commercial, institutional, or rental use is warranted for **90 days from date of purchase** on all material and workmanship (Rental use is warranted for 90 days).

If the purchaser discovers within this warranty period a defect in material or workmanship:

- He must promptly notify SMT Integrated Services, or an authorized dealer, in writing of the defect. In no event shall SMT Integrated Services or an authorized dealer receive notification later than 120 days after date of purchase.
- Within reasonable time after such notification, SMT Integrated Services, will correct any defect in material or workmanship on the SMT Integrated Services, by repairing or replacing part(s) with either new or used replacement parts.
- Such repair, including parts and labor shall be at the expense of SMT Integrated Services.

WHAT IS NOT COVERED BY THE WARRANTY

SMT Integrated Services does not warranty:

- Repairs made by unauthorized persons
- Damage caused by use of the Concord Grass Catcher for purpose other than it was designed
- Damages caused by disasters such as flood, fire, wind, lightning, Etc…
- Damage caused by neglect, abuse, abnormal use, improper or unreasonable use, accident, negligence or misuse.
- Repair or replacement resulting from the use of unauthorized parts, accessories or attachments.
- Repairs or replacements as a result of alterations or modification, in determination by SMT Integrated Services, which adversely affects the operation, performance or durability of the equipment.
- Depreciation or damage caused by normal wear, lack of reasonable and proper maintenance, failure to follow product's owner's manual operating, maintenance and adjustment instructions or other operational instructions provided by SMT Integrated Services.
- Normal maintenance parts and service including, but not limited to belts, etc.

DISCLAIMER OF WARRANTY

The forgoing warranties are in lieu of all other warranties, expressed or implied, including but not limited to the implied warranties of merchantability and fitness for a particular purpose. However, if the Concord Grass catcher is purchased as a consumer product, any implied warranty of merchantability or fitness for a particular purpose is limited to the duration of this limited warranty. Some states do not allow limitations on how long an implied warranty lasts, so the about limitations may not apply to you. This warranty gives you specific legal rights, and you may also have other rights, which vary from state to state.

LIMITATION OF REMEDIES

In no case shall SMT Integrated Services, be liable for any special, incidental, or consequential damages based upon breach of warranty, breach of contract, negligence, strict liability in tort, or any other legal theory.

Such damages include, but are not limited to:

- Loss of profit
- Loss of saving revenue
- Loss of use of Concord Grass Catcher or any associated equipment
- Cost of capital
- Cost of any substitute equipment, facilities, service, or downtime
- The claims of third parties including customers, and injury to property

Some states do not allow the exclusion or limitation of incidental or consequential damages, so the above limitation or exclusion may not apply.

THE LIMITS

Any action of breach of warranty must be commenced within thirteen (13) months following purchase date in a residential application. Any action for breach of warranty must be commenced within 120 days following purchase date in a commercial or rental application.

NO OTHER WARRANTIES

Unless modified in writing, signed by both parties, and approved by the President of SMT Integrated Services, this agreement is understood to be the complete and exclusive agreement between the parties, superseding all prior agreements, oral or written, and all other communications between the parties relating to the subject matter of this agreement. No employee of SMT Integrated Services, or any other party is authorized to make any warranty in addition to those made in this agreement.

OWNERS RESPONSIBILITY

You must maintain your Concord Grass catcher by following proper usage described in owner's manual.

This grass catcher like any other powered equipment is potentially dangerous unless properly operated. Any operator must be cautious and keep safety in mind at all times. Any operator, prior to attaching and using the Concord Grass catcher, should thoroughly familiarize themselves with the owner's manual regarding operations, procedures and safety of the machine, person, and persons around the area of grass catcher, as well as safety warnings on the grass catcher itself.

WARRANTY REGISTRATION

1. The warranty registration form must be completed and signed by the authorized dealer and original purchaser.
2. For validation, the completed warranty registration for MUST be forwarded to SMT Integrated Services within ten (10) days following date of purchase.
3. The date of purchase constitutes start of warranty.

SAFETY PRECAUTIONS

This safety alert symbol is used to call attention to a message intended to provide a reasonable degree of **PERSONAL SAFETY** for operators and other persons during the normal operation and servicing of this equipment.

DANGER – denotes immediate hazards, which **WILL** result in severe personal injury or death.

WARNING – denotes a hazard or unsafe practice, which **COULD** result in severe personal injury or death.

All operators should read this manual, or be instructed about safe operating and maintenance procedures. This is the owner's responsibility.
Incorrect usage of this machine may result in severe injury. It is the owner's responsibility that all operators read this manual thoroughly and be properly trained in operation and maintenance before attempting to set-up, adjusts, or service this machine. This owner's manual contains many safety precautions that must be followed to avoid injury.

TRAINING

1. Read, understand and follow all instructions on the machine and manual before attempting to assemble or operate. Keep this manual in a safe place for reference and for ordering replacement parts.
2. Be familiar with controls and their proper operation. Know how to stop the machine and disengage quickly.
3. Never allow children to operate the machine.
4. Never allow adults to operate this machine without them being a qualified and physically able individual, properly trained in the operation of this equipment. .
5. Thrown objects can cause serious personal injury. Turn mower off before opening top.
6. Exercise caution while operating tractor with this attachment, especially when traveling in reverse.

PREPARATION

1. Disengage mower deck before starting engine.
2. NEVER attempt to make any adjustments while engine is running.
3. To avoid personal injury or property damage use extreme caution when handling gasoline. Gasoline is extremely flammable and vapors are explosive. Serious personal
   injury can occur when gasoline is spilled on yourself or cloths, which can ignite. Wash your hands and change cloths immediately.
   a. FOLLOW ALL RECOMMENDATIONS IN YOUR MOWERS OWNERS MANUAL FOR HANDLING OF GASOLINE.

OPERATION

1. Do not put hands or feet near rotating parts, in the blower housing or discharge chute. Contact with the rotating parts can amputate hands and feet.
2. Never work on blower assembly or mower deck when the tractor engine is running.
3. Always operate with complete catcher system or discharge chute in place.
4. Always keep safety shields and covers in place while operating the machine.
5. Never operate with missing or damaged discharge chute. Keep all safety devices in place while working.
6. Never run an engine indoors or in a poorly ventilated area. Engine exhaust contains carbon monoxide, an odorless and deadly gas.
7. Do not operate machine while under the influence of drugs or alcohol.
8. Do not touch muffler or engine.
9. Do not carry passengers.
10. Exercise caution when changing direction or operating on a slope.
11. Never operate this machine without good visibility or light.
12. Disengage power to the deck when not in use.
13. Always use caution when going in reverse.
14. If machine to start to vibrate abnormally, stop the engine, disengage the deck, inspect for damage. Repair any damage before starting and operating.
15. Never leave a running machine unattended. Always disengage the mower deck clutch, place control levers in park brake position, stop tractor engine, and remove ignition key when leaving operator's seat. Wait until all belts come to a COMPLETE stop before using a probe to unclog the discharge chute, making any adjustments or inspecting the machine.
16. Never put your hands in the discharge chute when mower deck is engaged.
17. If a situation occurs that is not covered in this manual, use care and good judgment. Contact you Concord dealer immediately.
18. Never work on blower assembly or mower deck when the tractor engine is running.
19. Do not operate on slopes greater than 15 degrees. Always attach the counter weight when using the Concord Grass catcher.

MAINTENANCE AND STORAGE

1. Never tamper with safety devices.
2. Disengage mower deck clutch, place control levers in park brake position, turn the engine off and remove the key to prevent unintended starting.

3. Check bolts and screws for proper tightness at frequent intervals to keep machine in safe working condition.
4. Maintain and replace safety and instruction labels as necessary.
5. Follow all maintenance and storage instructions from your Concord Grass Catcher Owner's manual

WARNING—YOUR RESPONSIBILITY
Restrict the use of this power machine to persons who can read, understand and follow the warnings and instructions in this manual and on the machine.

REPLACE THIS DECAL IMMEDIATELY IF IT THEY BECOMES UNREADABLE OR DAMAGED.

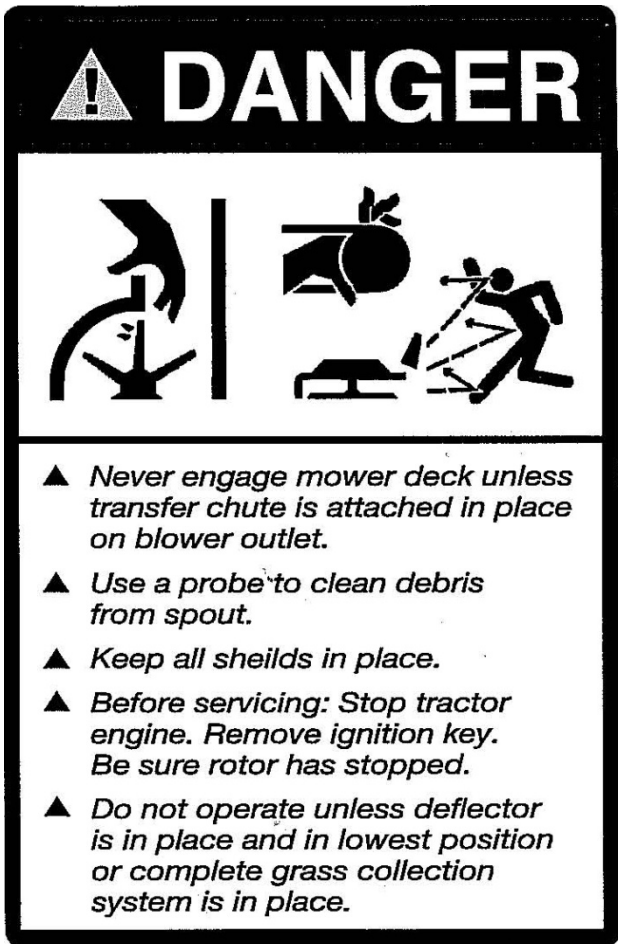

PART #2010088

Operation

Warning: Read, understand, and follow all instructions and warnings on the tractor, attachment, and in the tractor and catcher Owner's Manuals before operating. Become familiar with and comfortable using your entire MOWERS controls as instructed in your Owner's Manual before operating it with the grass catcher attachment.

- Make certain the correct weight of motor oil is in your tractors engine as instructed in your owner's manual.
- Always operate the grass catcher with the engine at high rpm's
- NEVER override any safety feature on either your tractor or grass catcher.
- Make sure that all nuts, bolts, and hardware are fastened securely and tight on both the Concord Grass Catcher attachment and your tractor prior to use.
- Make certain the grass catcher is assembled properly and mounted to the mower deck as instructed in the Owner's Manual.
- Test all controls for proper operation prior to operating the grass catcher.
- Never place hands or feet into blower housing. There is an impeller located inside the housing that will cause sever injury.
- Never engage the mower deck unless chute is strapped in place on blower outlet.
- If the chute becomes jammed with grass, immediately disengage deck, place control lever in the park brake position, shut off engine, remove the key, and wait for blower to stop before unclogging. Always use a rod or stick to unplug blower housing or chute. Use a probe to clean debris from blower and spout.
- Do not operate on slopes greater than 15 degrees. Always attach the counter weight when using the Concord Grass catcher.

INSTALLATION

Install drive pulley

Remove pulley cover, unscrew bolt that attaches outside pulley. Install Pulley assembly on top of outside pulley. **Tighten to at least 85 ft lbs**.

Pulley assembly

Place blower on installed bracket. Fasten as shown.

Belt Installation

Install belt as shown in picture; route belt with twists as shown in picture below. Use ½ inch drive socket wrench to position idler allowing for belt instillation.

Install Belt Guards

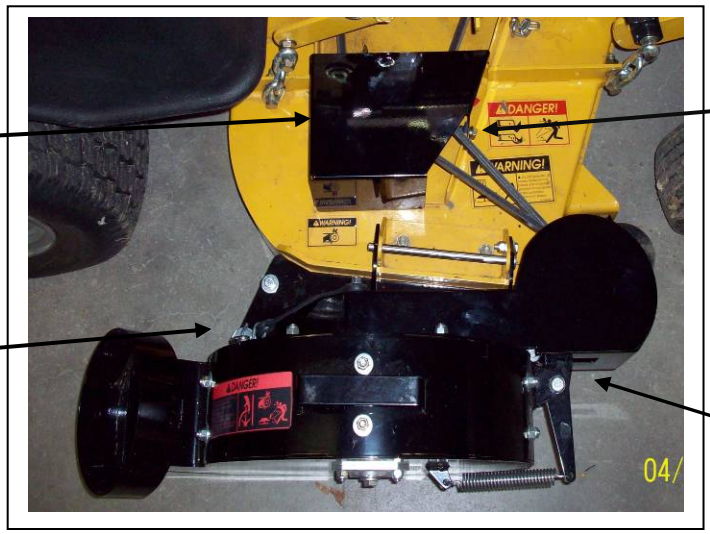

Bolt (FasTrak)

Bolt (FasTrak)

Slip guard under washer and attach rubber strap.

Fit slot in guard into groove located in lower idler spacer.

.....

Parts and Service

Use original Concord replacement parts ONLY. These parts are available through your local Concord dealer. To obtain prompt, efficient service, always provide the following information when ordering parts:

1. Correct part description or part number.
2. Correct serial number

All warranty repair and service must be handled through an authorized Concord dealer. Arrangements should be made through your local service center.

Grass Pump Assembly

ITEM NO.	PART NUMBER	DESCRIPTION	QTY.
1	2081109	WELD GRASS BLOWER ASSEMBLY	1
2	2010038	belt tensioner arm, grass pump	1
3	2081110	WELD MOUNT	1
4	2010073	bushing	2
5	798223	Bearing flangette, triangular	4
6	601071	Bearing	2
7	791566	Idler pulley, flat 3.25"	1
8	2010042	belt tensioner pulley spacer	1
9	C-601070	Drive pulley	1
10	2010134	Spring Belt tensioner	2
11	2010085	pulley spacer, lower	1
12	2010107	Belt tensioner spring spacer	4
13	Preferred Narrow FW 0.25		4
14	HBOLT 0.2500-20x1.75x0.75-N		2
15	108165	Impeller shaft	1
16	601065	Idler pulley "V" 3.00"	1
17	107915	Impeller	1
18	HBOLT 0.6250-11x3x1.5-N		1
19	2081111	grass pump liner	1
20	2010090	Belt guard, grass pump	1
21	Eye bolt .25-20 x .875		1
22	Regular LW 0.3125		2
23	fender washer .312		1
24	2010132	Tie down strap, rubber 6"	1
25	601073	impeller sapacer	1
26	FW 0.75		1

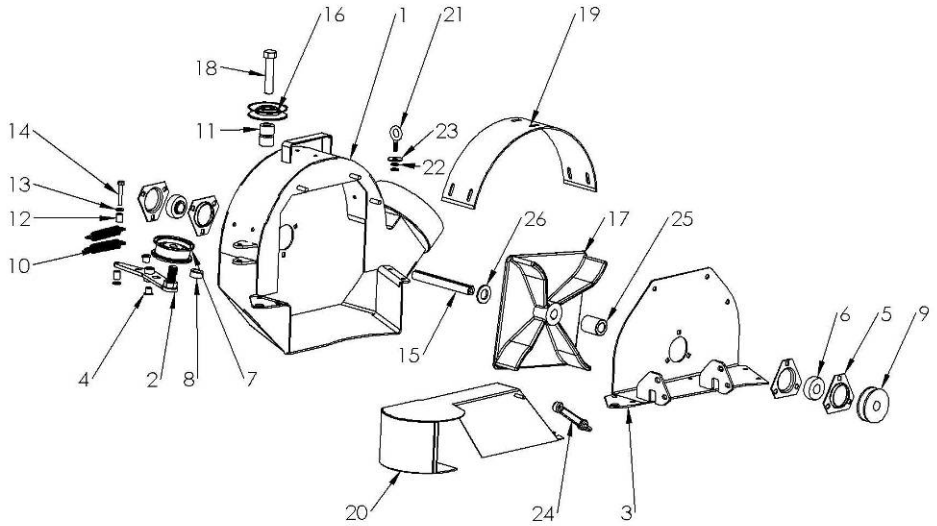

1380 Legion Road
Detroit Lakes, MN 56578
Phone: 800-725-7761
Fax: 888-385-2345
http://ztrattachments.com